linear dimension(Tolerances Standard GB/T 14486-2008)								—	⏥	⊥
variable range	to 6	over 6 to 10	over 10 to 30	over 30 to 60	over 60 to 100	over 100 to 160	over 160 to	to 10	over 10 to 100	over 100 to
tolerance	±0.20	±0.30	±0.50	±0.70	±1.00	±1.30	±1.60	0.10	0.30	0.60

REVISION RECORD				
REV.	DESCRIPTION	ECN No.	APPROVED	DATE
A	新发行		CLF	21.04.15

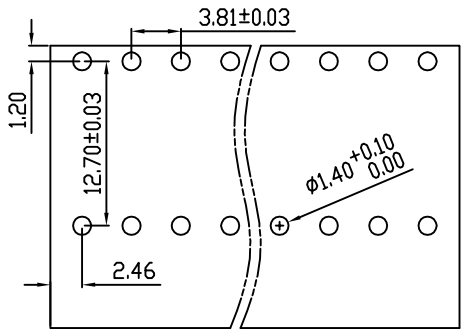

PCB LAYOUT

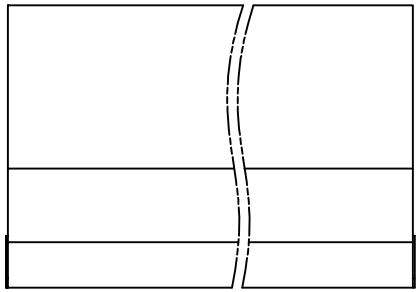

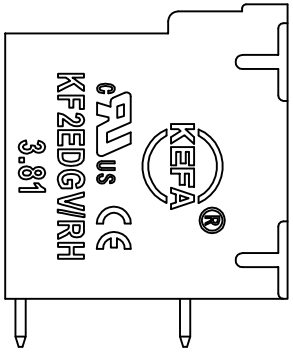

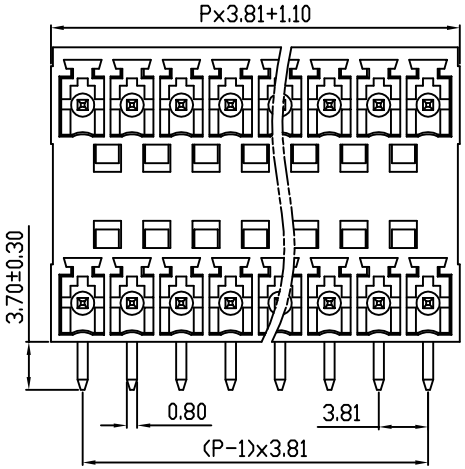

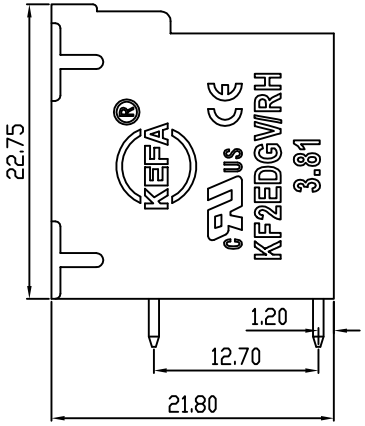

UL/CUL 技术 参数 UL/CUL Technical Data			
等 级 Use Group	B	C	D
额定电压 Rated Voltage [V]	300	-	300
额定电流 Rated Current [A]	8	-	10
接线范围 Wire Range 单/多芯线 Solid/Stranded [AWG]	-		
耐电压 Withstanding Voltage	AC1600V/1Min		

IEC 技术参数 IEC Technical Data			
过电压类别 Overvoltage Category	III	III	II
污染等级 Contamination Class	3	2	2
额定电压 Rated Voltage [V]	-	160	320
额定电流 Rated Current [A]	-	7	7
额定冲击电压 Impulse withstand voltagea [KV]	-	2.5	2.5
导线截面积 Conductor cross section 硬质/柔性导线 Solid/ flexible [mm²]	-		

材 料 Material	
绝缘材料 Insulation Material	热塑性材料 Thermoplastic
导体材料 Contactor Material	铜合金 Copper alloy
导体表面镀层 Contactive Coating	镀锡 Tin Plated

一般参数 Other Data	
间距 Pitch [mm]	3.81
极数 Poles [P]	2x(2-24)
剥线长度 Stripping Length [mm]	-
螺丝 Screw/扭矩 Torque(Max) [N.m]	-
工作温度 Operating temperatur [°C]	-40~+105
引针尺寸 Pin Dimensions [mm]	3.70
PCB板孔径 PCB Hole Diameter [mm]	1.40
安装类型 Mounting type	波峰焊 Wave soldering

DES.	SJD	DATE	21.04.15	单位 / UNITS	mm	尺寸 / SIZE	A4	比例 / SCALE	1:1	第三视角/THIRD ANGLE PROJECTION
CHK.	SY	DATE	21.04.15	KEFA® 慈溪市科发电子有限公司 CIXI KEFA ELECTRONICS CO., LTD						版本 / REV: A
APP.	CLF	DATE	21.04.15							名称 / TITLE: KF2EDGRH-3.81